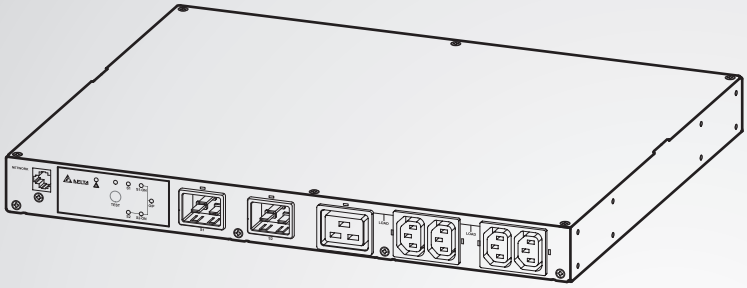

The power behind competitiveness

Delta InfraSuite Power Management

Static Transfer Switch

User Manual

www.deltapowersolutions.com

Smarter. Greener. Together.

Save This Manual

This manual contains important instructions and warnings that you should follow during the installation, operation, storage and maintenance of this product. Failure to heed these instructions and warnings will void the warranty.

Table of Contents

Chapter 1 : Important Safety Instructions

1.1 Important Safety Notes

- Only qualified personnel can service this equipment.
- Follow the following precautions when working on this unit.
  1. Remove watches, rings, or other metal objects.
  2. Use tools with insulated handles.
  3. Examine the packing container. Notify the carrier immediately if any damage is present.
  4. Do not disassemble the unit.
  5. Do not operate the unit near water or in an area with excessive humidity.
  6. Keep liquid and foreign objects from getting inside the unit.
  7. Do not operate the unit close to gas or fire.
- Upstream circuit breaker must be added for each input. The recommended breaker is D curve 16A.
- Verify whether the branch circuit breaker or fuse on service feed is correct.
- Verify line voltage requirements and the supplied line voltage prior to installation.

1.2 Electrical Warnings

- When servicing this equipment, you will need to remove its protective covers and disconnect the input power. Please observe great caution during these procedures. Only qualified personnel can service this equipment.
- Check that power cords, plugs, and outlets are in good condition.

1.3 Standard Compliance

- **Safety**

  UL (US) (UL 60950) CE (EU) (IEC 60950)

- **EMI**

  CISPR 22 Class A and FCC Class A

- **EMS**

  IEC 61000-4-2

  IEC 61000-4-3

  IEC 61000-4-4

  IEC 61000-4-5

  IEC 61000-4-6

  IEC 61000-4-8

  IEC 61000-4-11

- **IPv6 Certification**

  IPv6 Ready Logo Phase 2 (Core for Host, Logo ID 02-C-000624)

Chapter 2 : Product Introduction

2.1 Product Description

The STS is designed to guarantee the uninterrupted operation of sensitive equipment. It is powered by two independent power sources and automatically makes a rapid switch from one source to the other when the original power supplying to its connected load fails.

The user can know the power flow and the STS's status from the user-friendly front panel, and can read and write parameters via the built-in **NETWORK** port and **LOCAL** port located at the rear of the unit. The STS is designed to be efficient and reliable.

2.2 Features

- **Self-test function**

  Power-on self-test

  Manual self-test

- **Withstands high inrush current**

  SCR design withstands high inrush current during transferring process.

Chapter 3 : Package and Storage

3.1 Package Contents

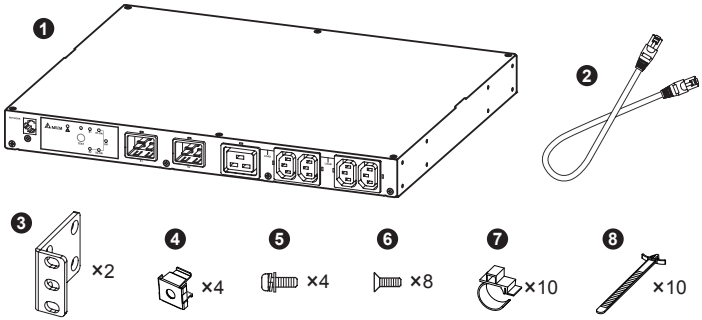

STS package contains the following items.

No.	Item	Quantity
❶	STS module	1 PC
❷	Extension Ethernet cable	1 PC
❸	Bracket Ear	2 PCS
❹	Rack nut	4 PCS
❺	Rack screw	4 PCS
❻	Bracket screw	8 PCS
❼	Wire Mount	10 PCS
❽	Cable Tie	10 PCS

3.2 Storage

Please store the STS in its original package and in a dry place. Keep the storage temperature between -15°C~ +50°C.

Chapter 4 : Installation

- **Front Installation**

1 Use the eight bracket screws (provided) to attach the two bracket ears (provided) to the lateral mounting holes located in the front of the STS. Please see ***Figure 4-1***.

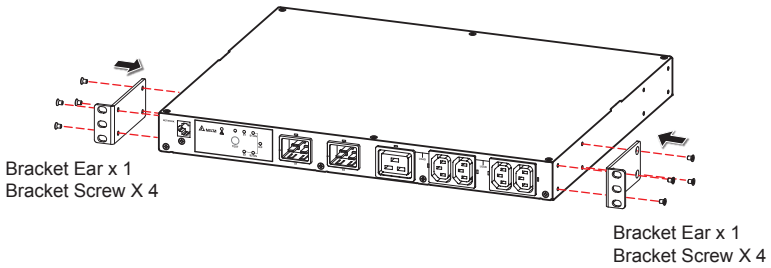

(Figure 4-1)

2 Use the four rack screws (provided) and four rack nuts (provided) to fix the STS on your rack. Please see ***Figure 4-2***.

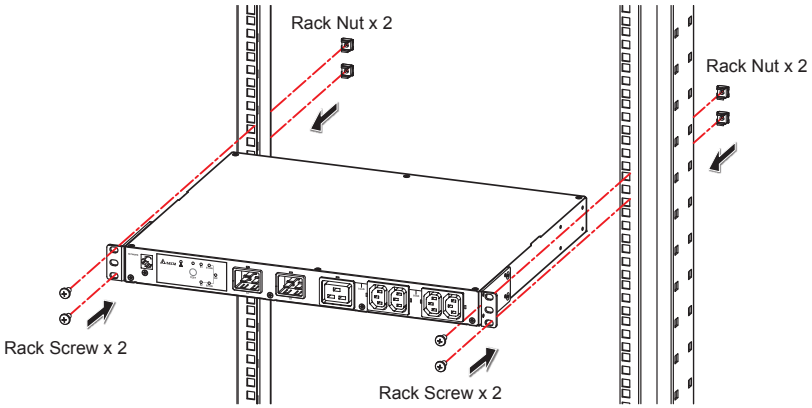

(Figure 4-2)

- **Rear Installation**

1 Use the eight bracket screws (provided) to attach the two bracket ears (provided) to the lateral mounting holes located at the rear of the STS. Please see ***Figure 4-3***.

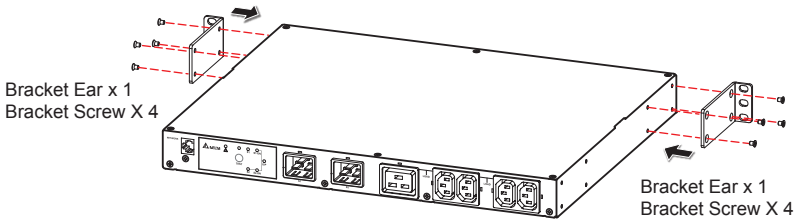

(Figure 4-3)

2 Use the four rack screws (provided) and four rack nuts (provided) to fix the STS on your rack. Please see ***Figure 4-4***.

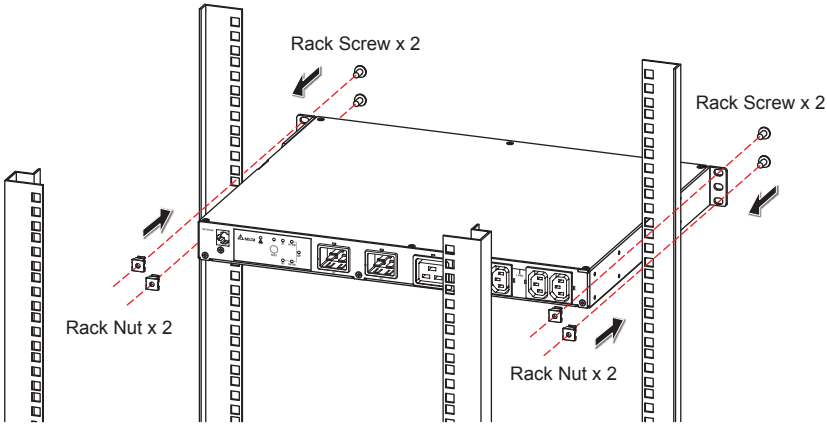

(Figure 4-4)

Chapter 5 : Wiring

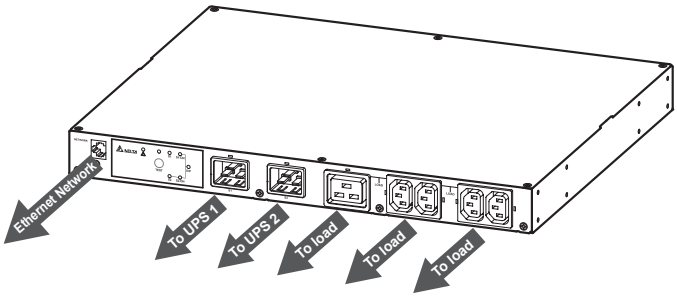

(Figure 5-1: Front view)

1. Use input power cables (not provided) to connect the STS and two UPSs (UPS1 (S1) is the preferred source).
2. Use output power cables (not provided) to connect the STS and loads.

NOTE :

To avoid the loose input/ output power cables, please use the provided wire mounts and cables ties to fix the input/ output power cables to the outlets/ sockets firmly. Please refer to the following procedures and figures.

A. Firmly insert the power cables into the outlets/ sockets (❶) and insert the cable ties into the wire mounts (❷), Please refer to ***Figure 5-2***.

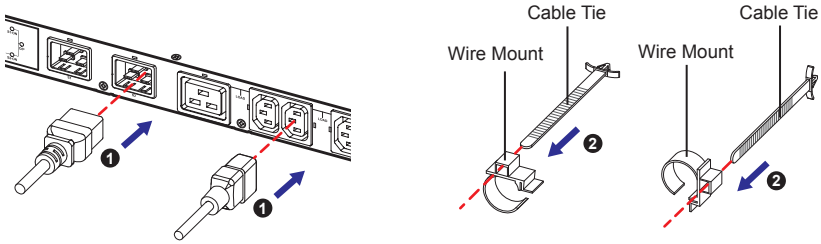

(Figure 5-2)

B. Firmly insert the wire mounts into the power cables (❸) and insert each cable tie's peak into the according slot (❹). Please refer to ***Figure 5-3***.

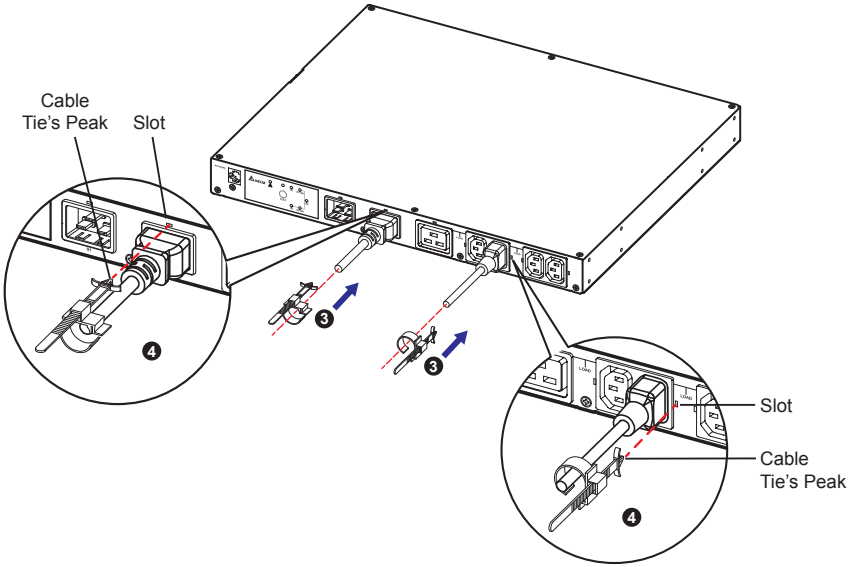

(Figure 5-3)

C. Clip each wire mount firmly (❺). Please refer to ***Figure 5-4***.

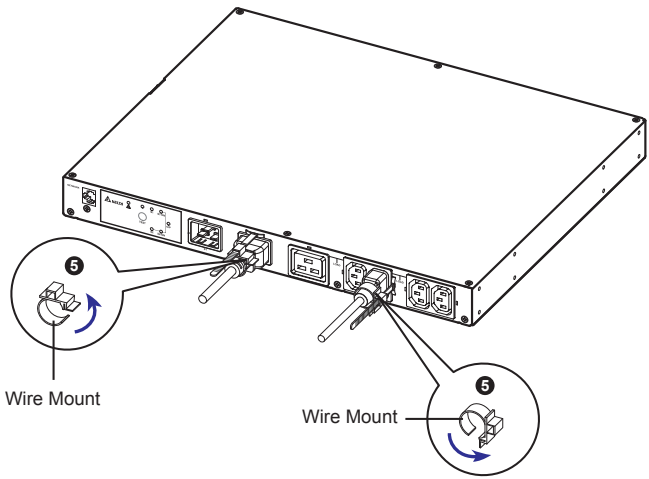

(Figure 5-4)

3 Connect to the Ethernet Network. There are two methods.

1. Method 1 (Front Application):

   Use the provided extension Ethernet cable to connect the rear panel's **NETWORK** port and the rear panel's **TRANSFER PORT**; please see ***Figure 5-5*** ❶. Use a user-supplied Ethernet cable to connect to the front panel's **NETWORK** port; please see ***Figure 5-5*** ❷.

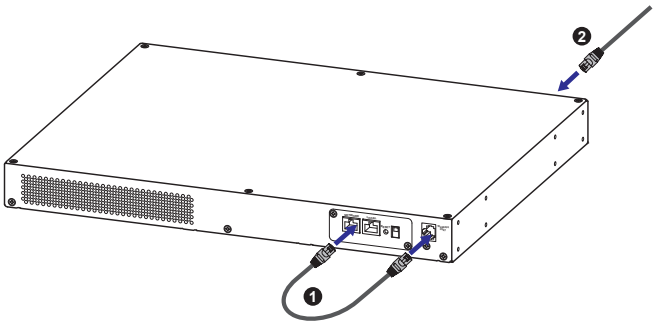

(Figure 5-5: Rear View)

2. Method 2 (Rear Application):

   Use a user-supplied Ethernet cable to connect to the rear panel's **NETWORK** port; please see ***Figure 5-6***.

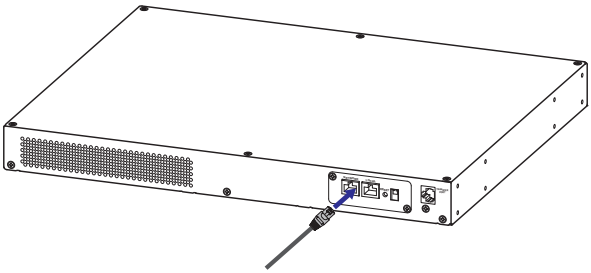

(Figure 5-6: Rear view)

Chapter 6 : Operation

6.1 Front Panel

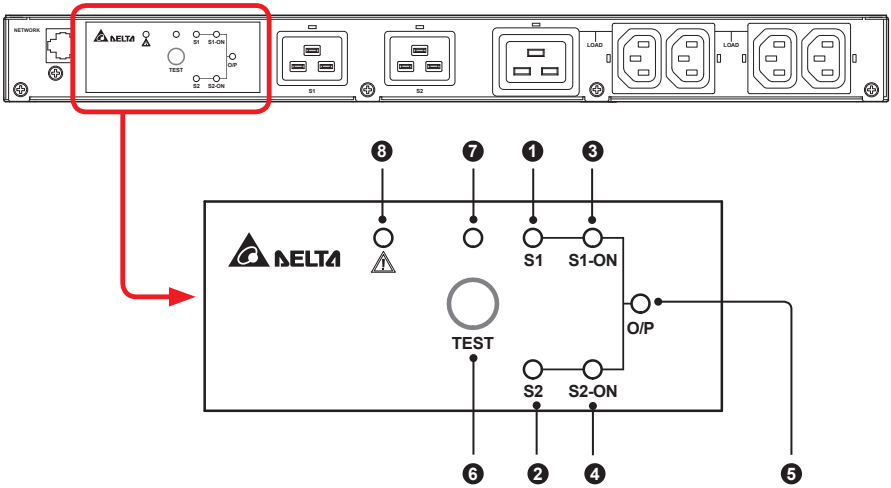

No.	Item	Description
❶	S1 LED	Green. The LED indicates the condition of input source 1. If the input source 1 is within the acceptable range, the LED will light up as green. If the input source 1 is out of the acceptable range, the LED will be off.
❷	S2 LED	Green. The LED indicates the condition of input source 2. If the input source 2 is within the acceptable range, the LED will light up as green. If the input source 2 is out of the acceptable range, the LED will be off.
❸	S1_ON LED	Green. If the STS uses input source 1 to supply power to the output, the LED will light up as green. If not, the LED will be off.
❹	S2_ON LED	Green. If the STS uses input source 2 to supply power to the output, the LED will light up as green. If not, the LED will be off.

No.	Item	Description
❺	O/P LED	Green. The LED indicates the output condition (voltage is > 60Vac). If there is output, the LED will light up as green. If not, the LED will be off.
❻	Test Button	Use this button to test the STS. Press the button, the STS will transfer to the 2nd source for 1 minute and then transfer back to the original preferred source.
❼	Test LED	Green. If you press the test button, the STS will be on test and the Test LED will flash (on: 0.5s; off: 0.5s). In normal operation, the LED will be off.
❽	Fault LED	Red. If the STS has any internal fault, the LED will light up as red. If the STS has any environmental fault, the LED will flash (on: 0.5s; off: 0.5s). Via the rear panel's **NETWORK** port, fault messages will be sent to a connected PC. From the PC, you can see error codes as follows

Internal Fault	
Error Code	**Meaning**
E11	Over temperature (due to detection of S1 heat-sink temperature)
E12	Over temperature (due to detection of S2 heat-sink temperature)
E13	Auxiliary power 1 circuit failure
E14	Auxiliary power 2 circuit failure
E21	Input relay of S1 is open
E22	Input relay of S1 is short
E23	Input relay of S2 is open
E24	Input relay of S2 is short
E25	Input SCR of S1 is open
E26	Input SCR of S1 is short
E27	Input SCR of S2 is open
E28	Input SCR of S2 is short

<table>
<tr><th>No.</th><th>Item</th><th>Description</th></tr>
<tr><td>❽</td><td>Fault LED</td><td>
<table>
<tr><th colspan="2">Environmental Fault</th></tr>
<tr><th>Error Code</th><th>Meaning</th></tr>
<tr><td>E01</td><td>Output overload</td></tr>
<tr><td>E02</td><td>Over temperature (due to detection of ambient temperature)</td></tr>
<tr><td>E03</td><td>Output temperature warning (due to detection of S1 heat-sink temperature)</td></tr>
<tr><td>E04</td><td>Over temperature warning (due to detection of S2 heat-sink temperature)</td></tr>
</table>
</td></tr>
</table>

6.2 Rear Panel

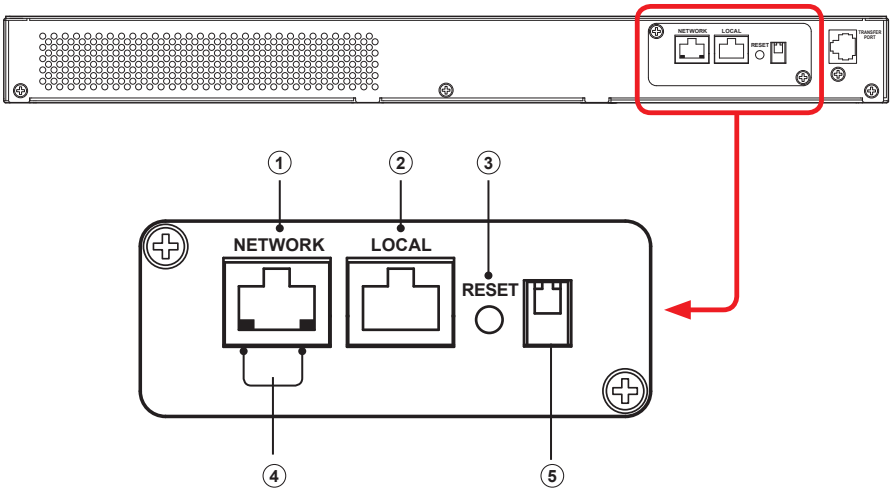

<table>
<tr><th>No.</th><th>Item</th><th>Description</th></tr>
<tr><td>①</td><td>NETWORK Port</td><td>Connects to the Ethernet Network.</td></tr>
<tr><td>②</td><td>LOCAL Port</td><td>Connects to a workstation with an RJ45 to DB9 cable to configure the system.</td></tr>
<tr><td>③</td><td>RESET Button</td><td>Resets InsightPower SNMP IPv6 for STS (hereafter referred to as SNMP IPv6). This does not affect the operation of the STS.</td></tr>
<tr><td>④</td><td>LED Indicators</td><td>NET LED (green) indicates network communication status. STS LED (amber) indicates the STS's communication status.
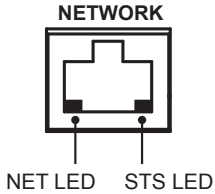

<table>
<tr><th>LED</th><th>Condition</th><th colspan="2">Meaning</th></tr>
<tr><td>NET LED</td><td>OFF</td><td colspan="2">Ethernet is unlinked.</td></tr>
<tr><td>NET LED</td><td>Green</td><td colspan="2">Ethernet is linked.</td></tr>
<tr><td>STS LED</td><td>OFF</td><td colspan="2">1. Initialization
2. SNMP IPv6 abnormality</td></tr>
<tr><td>STS LED</td><td>Amber</td><td colspan="2">SNMP IPv6 abnormality</td></tr>
<tr><td rowspan="2">STS LED</td><td rowspan="2">Blinking</td><td>Every second</td><td>Poor connection between the STS and the SNMP IPv6.</td></tr>
<tr><td>Every 50 ms</td><td>Normal connection between the STS and the SNMP IPv6.</td></tr>
</table></td></tr>
</table>

No.	Item	Description
⑤	DIP Switches	Set up operation mode. Please refer to the following table.

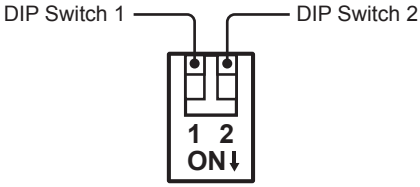

DIP Switch 1	DIP Switch 2	Operation Mode	Description
OFF	OFF	Normal Mode	The built-in SNMP IPv6 provides the STS's status information and parameters through a network system.
OFF	ON	Pass Through Mode	The built-in SNMP IPv6 stops polling the STS but transfers the communication data between the **LOCAL** port and the STS.
ON	OFF	N/A	Invalid state.
ON	ON	Configuration Mode	In this mode, the user can login through the **LOCAL** port and configure the built-in SNMP IPv6's settings.

6.3 Operation

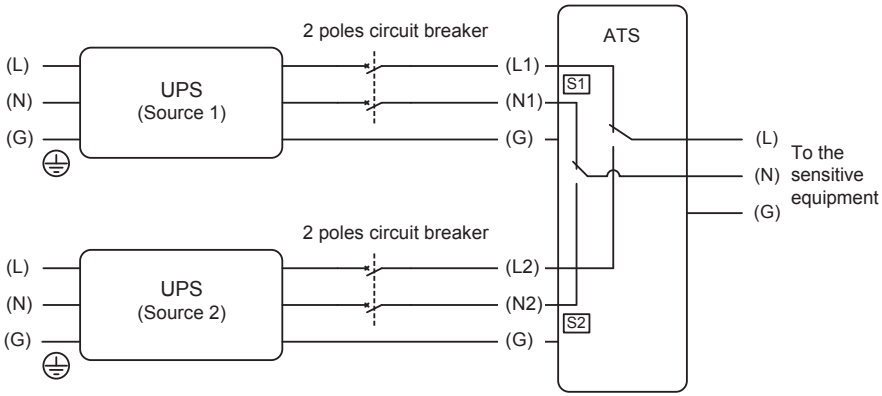

After power connection, the STS will automatically perform power-on self-test. After the test, the STS will start supplying power to its connected equipment. You can also press the ‘Test Button’ to force the STS to execute self-test.

Chapter 7 : InsightPower SNMP IPv6 for STS

7.1 Introduction of InsightPower SNMP IPv6 for STS

The InsightPower SNMP IPv6 for STS, hereafter referred to as SNMP IPv6, is built in the STS and is a device that provides an interface between the STS and a network. It communicates with the STS, acquires its information and remotely manages the STS via a network system. The SNMP IPv6 supports public protocols including SNMP and HTTP. You can effortlessly configure this SNMP IPv6 using a network system and easily obtain your STS's status and manage your STS via the SNMP IPv6.

7.2 SNMP IPv6 Features

- **Network STS management**

  Allows remote management of the STS from any workstation through Internet or Intranet.

- **Remote STS monitoring via SNMP & HTTP**

  Allows remote monitoring of the STS using SNMP NMS, Delta MIB (Management Information Base) or a Web Browser.

- **STS and system configuration from any client (password protected)**

  Sets the STS and system parameters through a Web Browser.

- **Event logs & metering data keeping**

  Provides a history data of the STS's power events, power quality and status.

- **Other features and supported protocols include:**

  - User notification via SNMP Traps and e-mail
  - Network Time Protocol
  - Telnet configuration
  - BOOTP/ DHCP
  - HTTPS, SSH, SFTP and SNMPv3 security protocols

- RADIUS (Remote Authentication Dial In User Service) login and local authentication
- Remote event log management through syslog
- IPv6 Ready Logo certified (ID 02-C-000624)

DEFAULT SETTING

User Name: *admin*

Password: *password*

DHCP Client: Enable

IPv4 Address: *192.168.1.100*

7.3 Top View and Front View of SNMP IPv6

- **Top View**

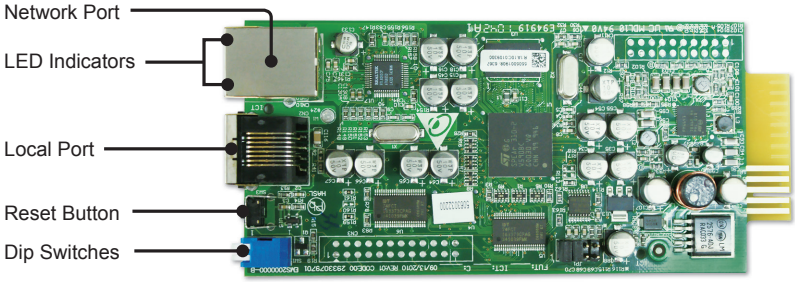

- **Front View**

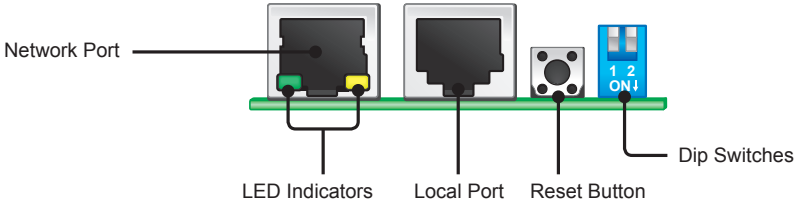

7.4 Console Management

You can manage the SNMP IPv6 through the **LOCAL** port. Please use an RJ45 to DB9 cable to connect the SNMP IPv6's **LOCAL** port and your workstation's COM port. Make sure both of the DIP switches are set to the **OFF** position (normal mode). The baud-rate of the workstation's COM setting should be **2400** bps.

- **Web Card Main Menu**

```
+=========================+
|   Web Card Main Menu    |
+=========================+
Web Card Version 01.12.11f
MAC Address 00-30-ab-26-b1-b4
[1].User Manager
[2].TCP/IP Setting
[3].Network Parameter
[4].Time Server
[5].Soft Restart
[6].Reset All To Default
[d].Device Communication
[z].Exit Without Save
[0].Save And Exit

Please Enter Your Choice =>
```

- **User Manager**

```
+=========================+
|     User Manager        |
+=========================+
RADIUS
[1].RADIUS Auth: Disable
[2].Server:
[3].Secret:
[4].Port:       1812
----------------
Local Auth
    Administrator
[5].Account:    admin
[6].Password:   ********
[7].Limitation: Only in This LAN
    Device Manager
[8].Account:    device
[9].Password:   ********
[a].Limitation: Only in This LAN
    Read Only User
[b].Account:    user
[c].Password:   ********
[d].Limitation: Allow Any
[0].Back To Previous Menu

Please Enter Your Choice =>
```

- **TCP/ IP Setting**

```
+=========================+
|     TCP/IP Setting      |
+=========================+
[1].IPv4 Address:        192.168.1.100
[2].IPv4 Subnet Mask:    255.255.255.0
[3].IPv4 Gateway IP:     192.168.1.254
[4].IPv4 DNS or WINS IP:192.168.1.254
[5].DHCPv4 Client:       Enable
[6].IPv6 Address:        ::
[7].IPv6 Prefix Length: 0
[8].IPv6 Gateway IP:     fe80::226:Sbff:fecc:fdal
[9].IPv6 DNS IP:         ::
[a].DHCPv6:              Disable
[b].Host Name(NetBIOS): INSIGHTPOWER
[c].System Contact:
[d].System Location:
[e].Auto-Negotiation:    Enable
[f].Speed:               100M
[g].Duplex:              Full
[h].Status Stable:       3
[i].Telnet Idle Time:    60 Seconds
[0].Back To Previous Menu

Please Enter Your Choice =>
```

- **Network Parameter**

```
+=========================+
|    Network Parameter    |
+=========================+
[1].HTTP Server:           Enable
[2].HTTPS Server:          Enable
[3].Telnet Server:         Disable
[4].SSH/SFTP Server:       Enable
[5].FTP Server:            Enable
[6].Syslog:                Disable
[7].HTTP Server Port:      80
[8].HTTPS Server Port:     443
[9].Telnet Server Port:    23
[a].SSH Server Port:       22
[b].FTP Server Port:       21
[c].Syslog Server1:
[d].Syslog Server2:
[e].Syslog Server3:
[f].Syslog Server4:
[g].SNMP Get,Set Port:  161
[0].Back To Previous Menu

Please Enter Your Choice =>
```

- **Time Server**

```
+========================+
|       Time Server      |
+========================+
[1].Time Selection:      SNTP
[2].Time Zone:           +0 hr
[3].1st Time Server:
[4].2nd Time Server:
[5].Manual Date:         01/01/2000 (MM/DD/YYYY)
[6].Manual Time:         00:00:00 (hh:mm:ss)
[0].Back To Previous Menu

Please Enter Your Choice =>
```

- **Soft Restart**

```
+========================+
|   Web Card Main Menu   |
+========================+
Web Card Version 01.12.11f
MAC Address 00-30-ab-26-b1-b4
[1].User Manager
[2].TCP/IP Setting
[3].Network Parameter
[4].Time Server
[5].Soft Restart
[6].Reset All To Default
[d].Device Communication
[z].Exit Without Save
[0].Save And Exit

Please Enter Your Choice => 5

The Web Card Will Restart.
Are You Sure? [Y]es/[N]o =>
```

- **Device Communication**

  You can enter the **STS Command Mode** below by selecting Device Communication.

```
STS> Vs1
216.8
STS> Vs2
217.9
STS> Iout
8.1
STS> Vout
217.1
STS> Vbp2s
180.0
STS> Vbs2p
180.0
STS> Tdp2s
12.0
STS> Tds2p
12.0
STS> TempF
96
STS> TempC
36
STS> Age
1075878
STS> Time
13:3:24 07/18 2011
STS> XCount
4402
STS> Prefer
S1
STS> DevID
12345678901234567890
STS> Serial

STS> Tprev1
13:35:16 07/18/2011
STS> Event1
0x0029
STS> Log
10
STS> Log 1
13:35:16 07/18/2011 0x0029
STS>

STS> SetDevID 1234567890abcdefghijklmn

STS> DevID
12345678901234567890
STS> SetDevID 1234567890abcdefghij

STS> DevID
1234567890abcdefghij
STS>
```

7.5 Upgrade

- **Upgrade via Web**

You can upgrade the SNMP IPv6's firmware or the STS's firmware through **the InsightPower SNMP IPv6 for STS Web** (please see the following figure). The SNMP IPv6 will restart after finishing self-upgrade. If you upload the STS's firmware to the Web, you can see the STS's firmware upgrade progress from the Web.

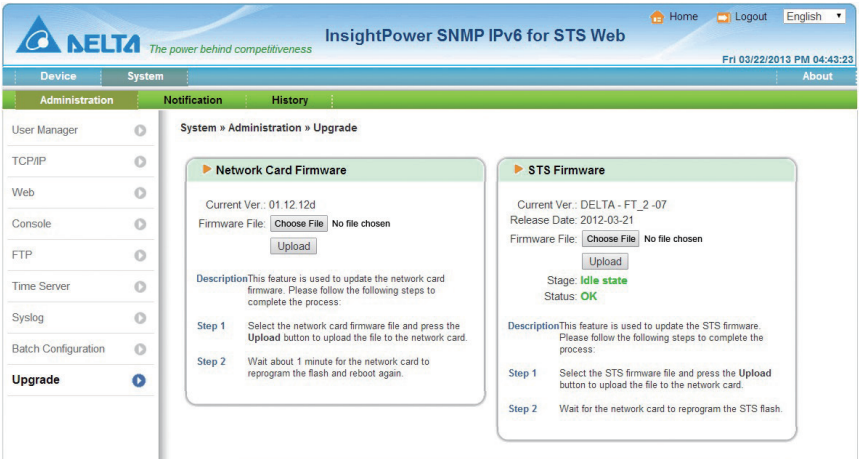

- **Upgrade via FTP/ SFTP**

You can also upgrade the SNMP IPv6's firmware or the STS's firmware by using FTP or SFTP program. Make sure you upload correct images to **upgrade_snmp** when upgrading SNMP IPv6's firmware, and upload correct images to **upgrade_device** when upgrading the STS's firmware.

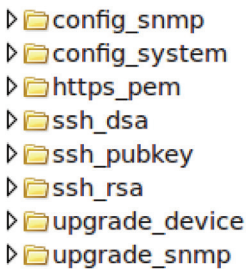

- **Upgrade via EzSetting**

  You can also upgrade the SNMP IPv6's firmware or the STS's firmware by using EzSetting.

  1. Click **Discover.** A list of SNMP devices is shown. Select a device from the Device List, and click **Modify**.

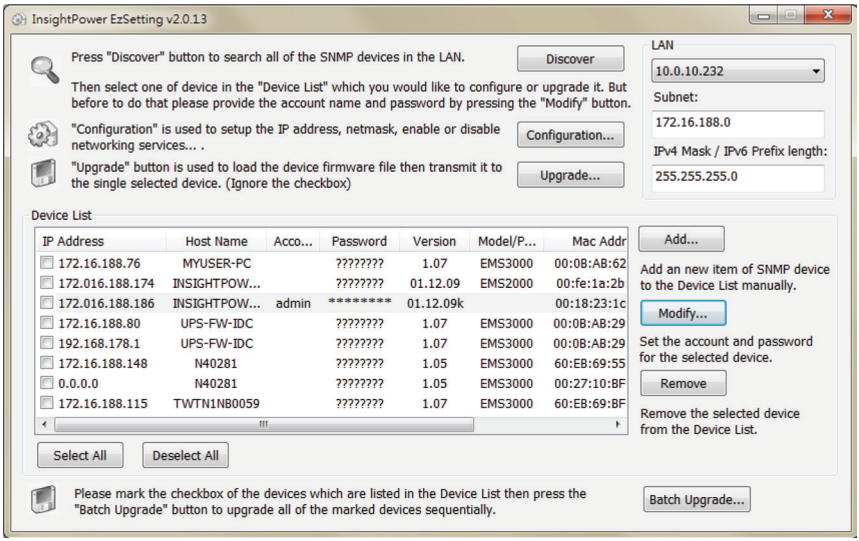

  2. Enter Administrator account and password.

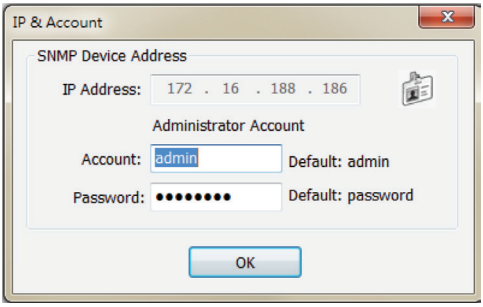

3. Click **Upgrade**. The upgrade dialog box pops up. Click **Browse** to select a valid firmware binary file. Verify the firmware version shown under File Information, and then click **Upgrade Now** to continue.

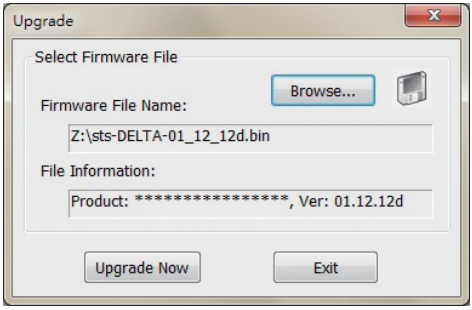

7.6 STS Command Settings

Command	Description	Parameter	Response
Info	Report summary information.	N/A	<Command>: [<response>] [<unit>]
TempF	Report internal STS fahrenheit temperature.	N/A	#
TempC	Report internal STS celsius temperature.	N/A	#
Age	Report internal STS age.	N/A	#
Time	Report present time.	N/A	hh:mm:ss MM/DD/YYYY
XCount	Report number of times that STS has transferred.	N/A	#
Model	Report the model name.	N/A	<model name string>
FWVer	Report the FW version.	N/A	<version string>
FWDate	Report the FW release date.	N/A	YYYY-MM-DD
Serial	Report the unit's serial number.	N/A	<Device serial string>

Command	Description	Parameter	Response
DevID	Report the unit's device ID.	N/A	<Device ID string>
Prefer	Report the preferred source.	N/A	S1 or S2
Sens	Report the sensitivity.	N/A	hi or low
Mode	Report the operation mode.	N/A	Initialization Diagnosis Off S1 S2 Safe Fault
Vout	Report the output voltage.	N/A	#.#
Iout	Report the output current.	N/A	#.#
Vs1	Report the primary voltage.	N/A	#.#
Vs2	Report the secondary voltage.	N/A	#.#
Fs1	Report the primary frequency.	N/A	#.#
Fs2	Report the secondary frequency.	N/A	#.#
Vtp2s	Report the primary to secondary trip voltage.	N/A	#.#
Vts2p	Report the secondary to primary trip voltage.	N/A	#.#
Vbp2s	Report the primary to secondary brownout voltage.	N/A	#.#
Vbs2p	Report the secondary to primary brownout voltage.	N/A	#.#

Command	Description	Parameter	Response
Tdp2s	Report the recover time of transfer from primary to secondary.	N/A	#.#
Tds2p	Report the recover time of transfer from secondary to primary.	N/A	#.#
Mvs1	Report the max voltage of comparing cycles for primary AC blackout.	N/A	#.#
Mvs2	Report the max voltage of comparing cycles for secondary AC blackout.	N/A	#.#
Mts1	Report the max time of comparing cycles for primary AC blackout.	N/A	#.#
Mts2	Report the max time of comparing cycles for secondary AC blackout.	N/A	#.#
Log	Report the event code and time of prior transfer.	1 ~ 10	hh:mm:ss MM/DD/YYYY 0x#
Tprev[1..9]	Report the time of prior transfer/event. Tprev1 is the most recent time.	N/A	hh:mm:ss MM/DD/YYYY
Event[1..9]	Report the event code for prior transfer. Event1 is the most recent event.	N/A	0x#
ClearLog	Clear event log.	N/A	Various kinds
SetTime	Set the present time.	hh:mm:ss [MM/DD/YYYY]	Various kinds
SetDate	Set the present date.	MM/DD/YYYY	Various kinds

Command	Description	Parameter	Response
SetPrefer	Set the preferred source.	1 or 2	Various kinds
SetDevID	Set the unit's device ID.	<20 characters> alphanumeric only	Various kinds
SetVtp2s	Set the primary to secondary trip voltage.	165.0 ~ 175.0	Various kinds
SetVts2p	Set the secondary to primary trip voltage.	165.0 ~ 175.0	Various kinds
SetVbp2s	Set the primary to secondary brownout voltage.	180.0 ~ 264.0	Various kinds
SetVbs2p	Set the secondary to primary brownout voltage.	180.0 ~ 264.0	Various kinds
SetTdp2s	Set the recover time of transfer from primary to secondary.	12.0 ~ 1800.0	Various kinds
SetTds2p	Set the recover time of transfer from secondary to primary.	12.0 ~ 1800.0	Various kinds
SetMvs1	Set the max voltage of comparing cycles for primary AC blackout.	30 ~ 50	Various kinds
SetMvs2	Set the max voltage of comparing cycles for secondary AC blackout.	30 ~ 50	Various kinds
SetMts1	Set the max time of comparing cycles for primary AC blackout.	2.0 ~ 4.0	Various kinds
SetMts2	Set the max time of comparing cycles for secondary AC blackout.	2.0 ~ 4.0	Various kinds

Command	Description	Parameter	Response
UpProcess	Status of upgrade progress.	N/A	Idle / Run / Error
UpStep	Stage of upgrade progress.	N/A	Init / File ID / Auth / Addr / Erase / Program / Read
UpPercentage	Percentage of upgrade progress.	N/A	#.#
UpResult	Result of upgrade progress.	N/A	OK / No response / File ID fail / Authentication fail / Erase fail / Flash fail / Read fail / Upgrade completion
UpDate	Report each FW upgrade time.	[Index] [# to show] # = 1 - 20	hh:mm:ss MM/DD/YYYY
AgentVer	Report SNMP card version.	N/A	AA.BB.XXX
Link	Check current Modbus connection.	N/A	1 - Normal / 2 - Abnormal / 3- Upgrading
Bye	Terminate remote connection.	N/A	Various kinds

7.7 Key Generation for SSH

- **For Linux**

(1) Please download and install OpenSSH from http://www.openssh.org.

(2) Launch shell and enter the following command to create your own keys.

Please ignore it when prompted to provide passphrase.

DSA Key:ssh-keygen –t dsa

RSA Key:ssh-keygen –t rsa

(3) Upload DSA and RSA key files on the web.

- **For Windows**

  (1) Please download and install PuTTY from http://www.putty.org.

  (2) Run **puttygen.exe** from the installed directory.

  (3) Select **SSH-2 RSA** from the Parameters area and click **Key→ Generate key pair** to generate an RSA key.

  (4) Select **Conversions→ Export OpenSSH Key** and assign a file name to the RSA key. Please ignore it when prompted to provide key passphrase.

  (5) Select **SSH-2 DSA** from the Parameters area and select **Key→ Generate key pair** to generate a DSA key.

  (6) Select **Export OpenSSH Key** from **Conversions** and assign a file name to the DSA key. Please ignore it when prompted to provide key passphrase.

  (7) Upload the DSA and RSA key files to the web.

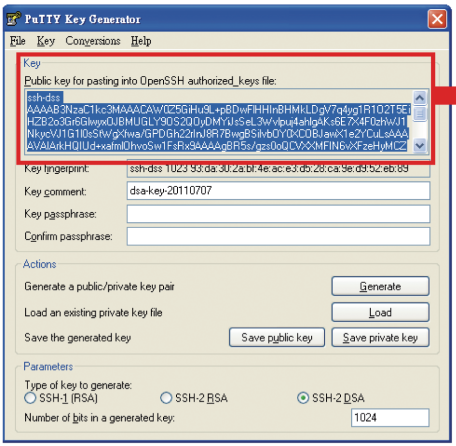

Please copy the context of public key here and paste it into a key file.

Chapter 8 : Troubleshooting

Problem	Possible case	Solution
All LEDs on the front panel are off.	The power sources, S1 and S2, are both absent.	1. Check the output (overload/ short-circuit). 2. Check both power sources, S1 and S2. 3. Reset the upstream circuit breakers.
Input S1 or Input S2 LED is off.	The corresponding power source is absent or out of range.	1. Check the corresponding power source. 2. Reset the corresponding upstream circuit breaker.
Fault LED flashes.	Output overload.	Reduce the connected loads.
	Over temperature.	Check the environment temperature.
Fault LED lights up.	Internal component damage.	Please contact service personnel.
Can not communicate with the STS.	Wrong setting or malfunction.	Refer to the user manual of InsightPower SNMP IPv6 for STS.

Appendix 1 : Specifications

STS 16A		
Nominal Voltage	200/ 208/ 220/ 230/ 240V	
Operating Frequency	45Hz to 65HZ	
Nominal Current	16A	
Input Connection	C20 x 2	
Output Connection	C13 x 4 & C19 x 1	
Physical Dimensions (W x D x H)	440 x 385 x 43 mm	
Weight	4.85 Kg	
Environment	Operating Temperature	0 ~ 40°C
	Storage Temperature	-15 ~ 50°C
	Humidity	5% ~ 95% RH (non-condensing)
	Audible Noise	<40 dBA
	Operating Altitude	0 to 2000m (0 to 6252 ft)

NOTE :

1. Refer to the rating label for the safety rating.
2. All specifications are subject to change without prior notice.

Appendix 2 : Warranty

Seller warrants this product, if used in accordance with all applicable instructions, to be free from original defects in material and workmanship within the warranty period. If the product has any failure problem within the warranty period, Seller will repair or replace the product at its sole discretion according to the failure situation.

This warranty does not apply to normal wear or to damage resulting from improper installation, operation, usage, maintenance or irresistible force (i.e. war, fire, natural disaster, etc.), and this warranty also expressly excludes all incidental and consequential damages.

Maintenance service for a fee is provided for any damage out of the warranty period. If any maintenance is required, please directly contact the supplier or Seller.

WARNING!

The individual user should take care to determine prior to use whether the environment and the load characteristic are suitable, adequate or safe for the installation and the usage of this product. The User Manual must be carefully followed. Seller makes no representation or warranty as to the suitability or fitness of this product for any specific application.

Smarter. Greener. Together.

5013236701