Common Chokes

EMI Common-Mode Suppression Inductors

LFZ28H Type

Mechanical Dimension: Unit: mm

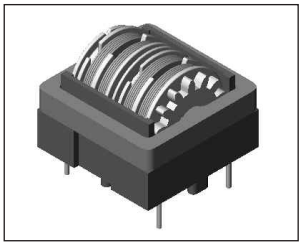

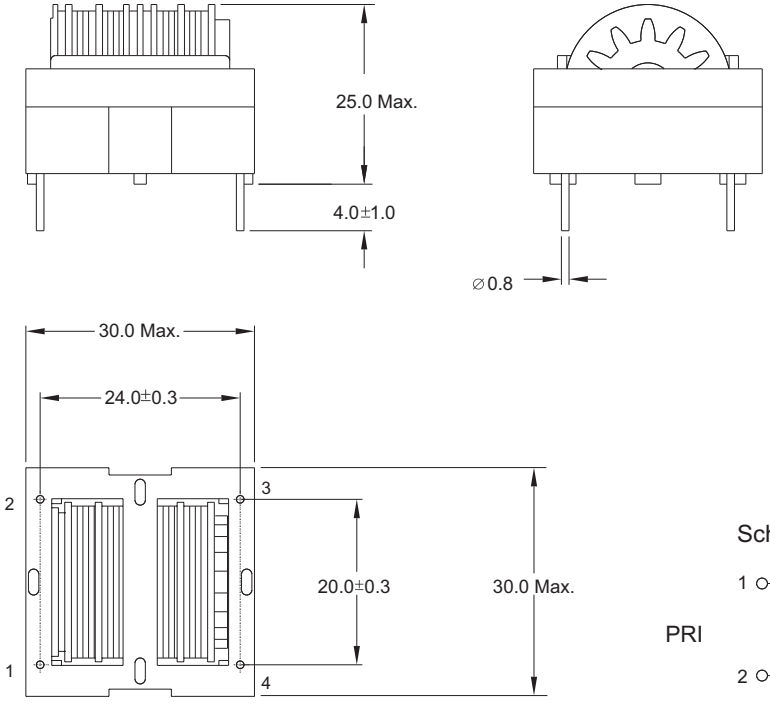

Schematic :

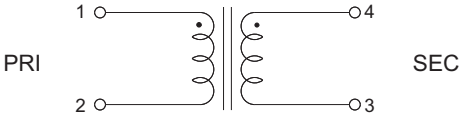

Electrical Characteristics:

■ AT 25°C, 1KHz/1V Tested:

PART NO.	INDUCTANCE (mH) MIN	DCR (Ω) MAX	RATED CURRENT (Aac)	TEMPERATURE RISE (°C) MAX
LFZ28H01	78.0	1.46	0.6	45
LFZ28H02	53.0	1.01	0.7	45
LFZ28H03	37.0	0.66	0.9	45
LFZ28H04	25.0	0.49	1.0	45
LFZ28H05	22.0	0.41	1.2	45
LFZ28H06	18.0	0.36	1.3	45
LFZ28H07	15.0	0.28	1.5	45
LFZ28H08	13.0	0.22	1.8	45
LFZ28H09	8.0	0.17	2.1	45
LFZ28H10	7.0	0.14	2.3	45
LFZ28H11	5.0	0.11	2.5	45
LFZ28H12	5.8	0.10	2.6	45
LFZ28H13	3.8	0.07	3.5	45
LFZ28H14	2.3	0.037	4.3	45
LFZ28H20	11.0	0.22	2.0	45

* WITHSTANDING VOLTAGE BETWEEN L1 & L2 1.5KV 1 MINUTE
* GOOD DIFFERENCE IN WINDING L1 & L2 INDUCTANCE

DELTA ELECTRONICS, INC.
(TAOYUAN PLANT CPBG) *252, SAN YING ROAD, KUEISAN INDUSTRIAL ZONE, TAOYUAN SHIEN, 333, TAIWAN, R.O.C.*
TEL: 886-3-3591968; FAX: 886-3-3591991
http://www.deltaww.com